LEXRA	System-On-Chip	LX4180
	32-bit RISC Core	Product Features

- **R3000®-class RISC Processor Core:** Executes MIPS® I instruction set*, offering designers a familiar programming environment and choice of third party development tools.
- **Performance, Power and Price:** Operates at 155 MHz, consumes 175 mW of power (less than 50 µW in standby mode), and entire processor subsystem occupies 3.8 mm^2 on a typical .25µm process.
- **MIPS16™ Instruction Compression:** Reduces program size by up to 40%. On-chip programs require less memory, resulting in cost saving for System-On-Chip designs.
- **Multiply-Accumulate Engine :** Completes one MAC instruction every cycle, for performance in signal processing applications such as software modems. (optional)
- **EJTAG Debug:** Implements all required features in the EJTAG 2.0.0 specification for full speed debug with real time instruction trace. (optional)
- **Development Tools:** Available from third party suppliers supporting the MIPS architecture, including industry leaders Green Hills Software, Embedded Performance, and Wind River Systems.
- **Real-Time Operating System (RTOS) Support:** Includes NucleusPLUS, ThreadX™, and VxWorks™.
- **Extendable and Configurable:** Instruction set can be extended with custom instructions, coprocessors can be added, and memory organization and size can be configured to support different applications.
- **ASIC-Friendly Implementation Methodology:** Fully synchronous design with single phase clocking can be implemented with commercial EDA tools – no custom tools or circuit design required.
- **Portability:** Available as a synthesizable RTL core or as a SmoothCore™, an optimized hard macro that has been ported to a specific foundry process. Foundry partners include IBM, TSMC, and UMC.

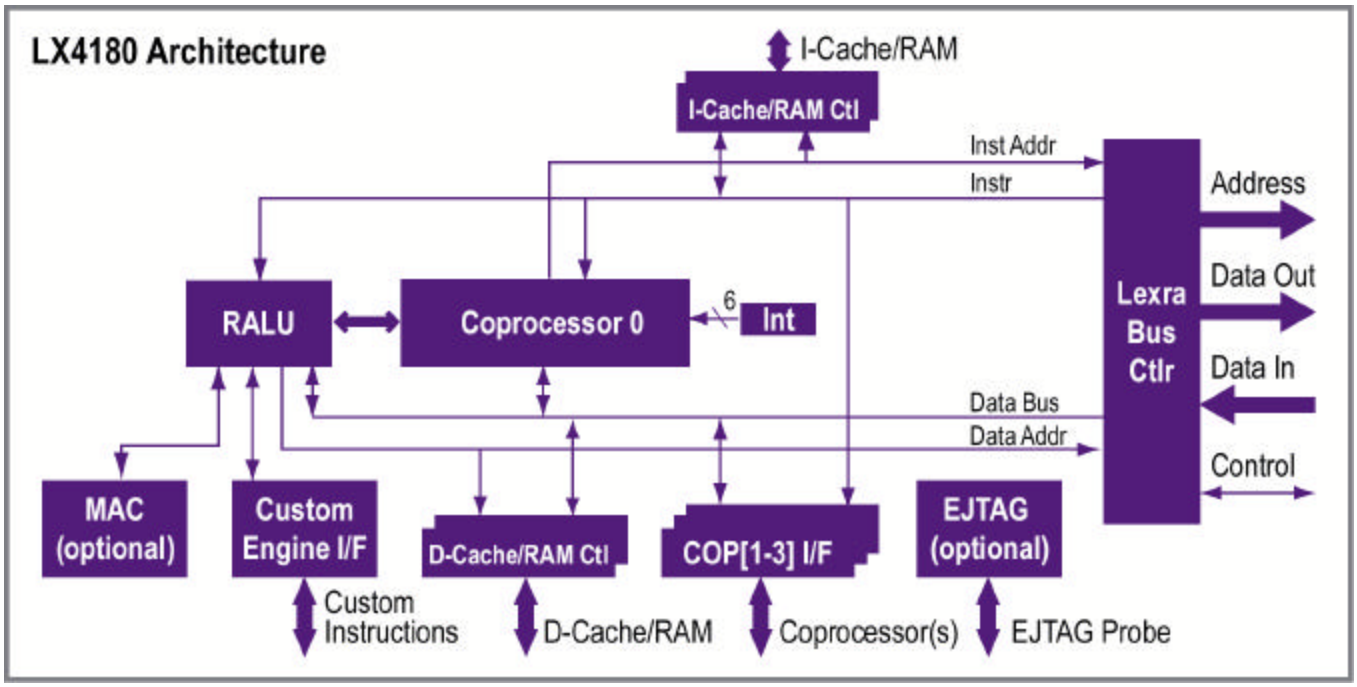

MIPS, MIPS I, MIPS16, R3000, and any other MIPS common law marks are trademarks and/or registered trademarks of MIPS Technologies Inc. Lexra Inc. is not associated with MIPS Technologies Inc. in any way. *Unaligned load and store instructions are not supported in hardware.
Copyright© 1999 Lexra, Inc. SmoothCore is a trademark of Lexra, Inc. All other trademarks are the property of their owners.